40W isolated DC-DC converter with ultra-wide, ultra-high 200 - 1200V DC input for renewable energy

UL1741 EN62109-1 Report RoHS

## FEATURES

- Input voltage up to 1300VDC (Transient, duration: 30s)
- Ultra-wide input voltage range of 200 - 1200VDC
- Industrial grade operating temperature -40℃ to +70℃
- High I/O isolation voltage up to 4000VAC
- High efficiency, low ripple & noise
- Input under-voltage protection, input reverse polarity protection, output short circuit, over-current, over-voltage protection
- Reinforced insulation
- Safety according to CSA-C22.2 No.107.1

*PV40-27BxxR2 series is regulated DC-DC converters with an ultra-wide DC input of 200-1200VDC. The products feature high efficiency, high reliability, high insulation and high level of safety. This type of power supply is widely used in renewable energy industries such as photovoltaic, power generation, energy storage, inverters and high-voltage DC conversions. The converters provide multiple protection features and guarantee stable and safe operating environments even under abnormal working conditions. For extremely harsh EMC environment, we recommend using the application circuit show in Design Reference of this datasheet.*

## Selection Guide

| Certification | Part No.* | Output Power (W) | Nominal Output Voltage and Current (Vo/Io) | Efficiency at 200VDC (%) Typ. | Capacitive Load (μF) Max. (Normal temperature full load) |
|---|---|---|---|---|---|
| UL/EN | PV40-27B12R2 | 40 | 12V/3.34A | 83 | 2200 |
| | PV40-27B15R2 | | 15V/2.67A | 84 | 1500 |
| | PV40-27B24R2 | | 24V/1.67A | 85 | 820 |
| | PV40-27B28R2 | | 28V/1.43A | 85 | 820 |
| / | PV40-27B32R2 | | 32V/1.25A | 85 | 680 |

Note: *Use suffix "A5" for chassis mounting and suffix "A6" for DIN-Rail mounting.

## Input Specifications

| Item | Operating Conditions | Min. | Typ. | Max. | Unit |
|---|---|---|---|---|---|
| Input Voltage Range | | 200 | -- | 1200 | VDC |
| | Transient (30s) | -- | -- | 1300 | |
| Input Current | 200VDC | -- | -- | 0.32 | A |
| | 600VDC | -- | -- | 0.10 | |
| Inrush Current | 600VDC | -- | 60 | -- | |
| | 1200VDC | -- | 100 | -- | |
| Under-voltage Protection | | Lockout activation range: 140 - 190V<br>Lockout deactivation range: 160 - 200V | | | |
| Reverse Input Voltage Protection | | Available | | | |
| External Input Fuse Required | | 4A/1500VDC, required | | | |
| Hot Plug | | Unavailable | | | |

## Output Specifications

| Item | Operating Conditions | Min. | Typ. | Max. | Unit |
|---|---|---|---|---|---|
| Output Voltage Accuracy | | -- | ±1.0 | ±2.0 | % |
| Line Regulation | Full load | -- | ±0.5 | -- | |
| Load Regulation | 0% - 100% load | -- | ±0.5 | -- | |
| Ripple & Noise* | 20MHz bandwidth (peak-to-peak value) | -- | 100 | 200 | mV |
| Temperature Coefficient | | -- | ±0.02 | -- | %/℃ |
| Short Circuit Protection | | Hiccup, continuous, self-recovery | | | |
| Over-current Protection | 12/15/24/28V output | ⩾110%Io, self-recovery | | | |


MORNSUN Guangzhou Science & Technology Co., Ltd. reserves the copyright and right of final interpretation

| | | | | | | |
|---|---|---|---|---|---|---|
| | 32V output | | ≥160%Io, self-recovery | | | |
| Over-voltage Protection | 12V/15V output | | ≤20VDC | Output voltage clamp or hiccup | | |
| | 24V output | | ≤30VDC | | | |
| | 28V output | | ≤35VDC | | | |
| | 32V output | | ≤40VDC | | | |
| Minimum Load | | | 0 | -- | -- | % |
| Start-up Delay Time** | 200 - 1200VDC | | -- | -- | 2 | s |
| Hold-up Time | Room temperature, full load | 600VDC input | -- | 5 | -- | ms |

Note: * The "parallel cable" method is used for ripple and noise test, please refer to PV Converter Application Notes for specific information.
** Full input voltage / output load range (The cooling-time between input power-off and power-on again is greater than 15s).

## General Specifications

| Item | | Operating Conditions | Min. | Typ. | Max. | Unit |
|---|---|---|---|---|---|---|
| Isolation | Input - output | Electric Strength Test for 1min., leakage current <5mA | 4000 | -- | -- | VAC |
| Operating Temperature | | | -40 | -- | +70 | ℃ |
| Storage Temperature | | | -40 | -- | +85 | |
| Storage Humidity | | | -- | -- | 95 | %RH |
| Soldering Temperature | | Wave-soldering | 260 ± 5℃; time: 5 - 10s | | | |
| | | Manual-welding | 360 ± 10℃; time: 3 - 5s | | | |
| Power Derating | | -40℃ to -25℃ | 2.67 | -- | -- | %/℃ |
| | | +50℃ to +70℃ | 2.50 | -- | -- | |
| | | 2000m - 5000m | 6.70 | -- | -- | %/Km |
| Switching Frequency | | | -- | 65 | -- | kHz |
| Altitude | | | -- | -- | 5000 | m |
| Safety Standard | | PV40-27B12/15/24/28R2 | UL1741 safety approved & EN62109-1 (Report); Designed to meet CSA-C22.2 No.107.1-16 | | | |
| | | PV40-27B32R2 | Designed to meet UL1741, CSA-C22.2 No.107.1, EN62109-1 | | | |
| MTBF | | MIL-HDBK-217F@25℃ | ≥ 300,000 h | | | |

## Mechanical Specifications

| | | |
|---|---|---|
| Case Material | | Black flame-retardant and heat-resistant plastic (UL94V-0) |
| Dimensions | Horizontal package | 89.00 x 63.50 x 25.00 mm |
| | A5 chassis mounting | 135.00 x 70.00 x 33.50 mm |
| | A6 DIN-Rail mounting | 137.00 x 70.00 x 39.00 mm |
| Weight | Horizontal package | 220g (Typ.) |
| | A5 chassis mounting | 300g (Typ.) |
| | A6 DIN-Rail mounting | 370g (Typ.) |
| Cooling Method | | Free air convection |

## Electromagnetic Compatibility (EMC)

| | | | | |
|---|---|---|---|---|
| Emissions | CE | CISPR32/EN55032 | CLASS A (See Fig. 2 for recommended circuit) | |
| | RE | CISPR32/EN55032 | CLASS A (See Fig. 2 for recommended circuit) | |
| Immunity | ESD | IEC/EN61000-4-2 | Contact ±6KV/Air ±8KV | Perf. Criteria A |
| | RS | IEC/EN61000-4-3 | 10V/m | Perf. Criteria A |
| | EFT | IEC/EN61000-4-4 | ±2KV<br>±4KV (See Fig. 2 for recommended circuit) | Perf. Criteria B |
| | Surge | IEC/EN61000-4-5 | line to line ±1KV<br>line to line ±2KV (See Fig. 2 for recommended circuit) | Perf. Criteria A |
| | CS | IEC/EN61000-4-6 | 10Vr.m.s | Perf. Criteria A |


MORNSUN Guangzhou Science & Technology Co., Ltd. reserves the copyright and right of final interpretation

## Product Characteristic Curve

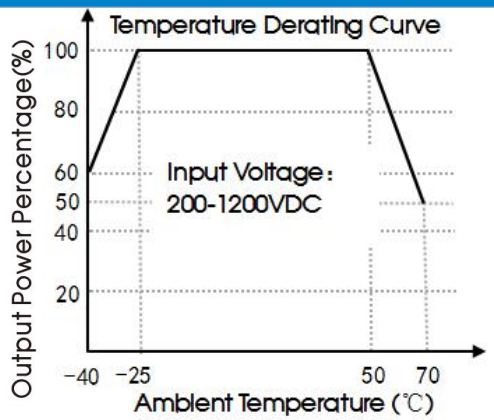


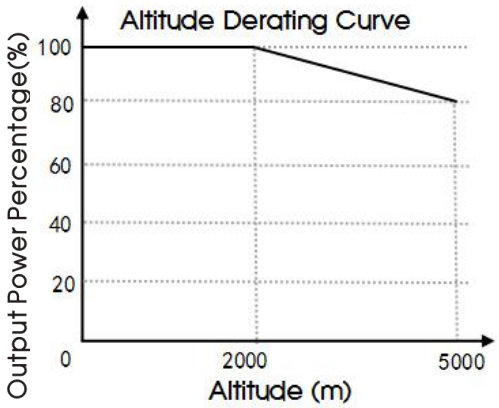


Note:
① For operation of this converter series in an altitude between 2000 - 5000m above sea level, the output power must be derated as per the altitude derating curve;
② This product is suitable for applications using natural air cooling; for applications in closed environment please consult Mornsun FAE.

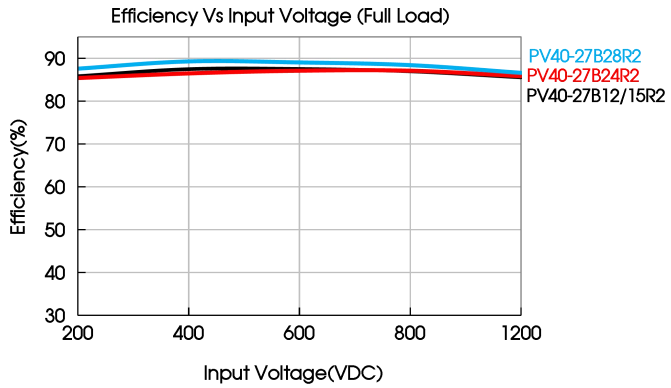


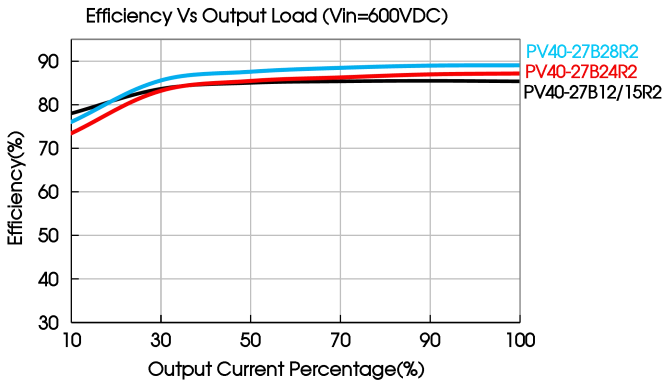


## Design Reference

### 1. Typical application

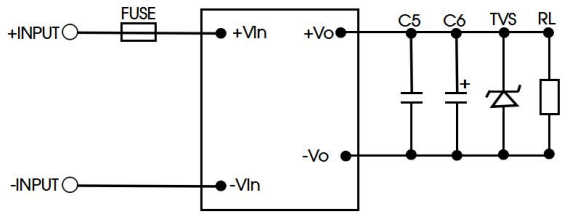


Fig. 1: Typical application circuit

| Model | FUSE | C5 | C6 | TVS |
|---|---|---|---|---|
| PV40-27B12R2 | 4A/1500VDC, required | 1μF/35V | 220μF/35V | SMBJ20A |
| PV40-27B15R2 | | | | |
| PV40-27B24R2 | | | | SMBJ30A |
| PV40-27B28R2 | | | 120μF/35V | SMBJ35A |
| PV40-27B32R2 | | 1μF/50V | 120μF/50V | SMBJ43A |

Note on filter components:
We recommend using an electrolytic capacitor with high frequency and low ESR rating for C6 (refer to manufacture's datasheet). Choose a capacitor voltage rating with at least 20% margin, in other words not exceeding 80%. C5 is a ceramic capacitor, used to filter high-frequency noise. TVS is a recommended suppressor diode to protect the application in case of a converter failure.

### 2. EMC compliance recommended circuit

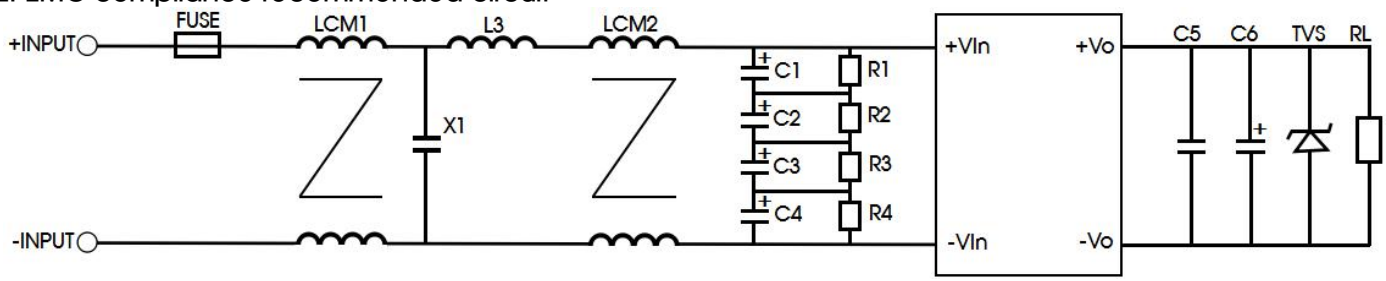


Fig 2: EMC application for higher compliance requirements (output parameters are show in Figure 1)


MORNSUN Guangzhou Science & Technology Co., Ltd. reserves the copyright and right of final interpretation

| Element model | Recommended value |
|---|---|
| FUSE | 4A/1500VDC, required |
| LCM1 | 1mH (recommended to use MORNSUN's FL2D-10-102B) |
| LCM2 | 7mH (recommended to use MORNSUN's FL2D-10-702B) |
| L3 | 1.2mH/>0.5A |
| X1 | 224M/760VAC |
| C1, C2, C3, C4 | 10μF/450V |
| R1, R2, R3, R4 | 1MΩ/2W |

### 3. IMPORTANT SAFETY INSTRUCTIONS

Additional protective devices, such as lightning protector need to be added if there is an transient pulse voltage greater than 6KV at the input of PV products in system applications.

### 4. For additional information please refer to application notes on www.mornsun-power.com.

## Dimensions and Recommended Layout

THIRD ANGLE PROJECTION

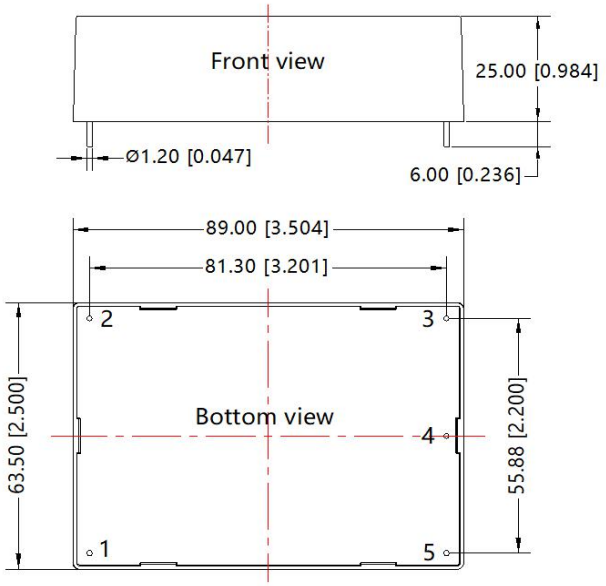


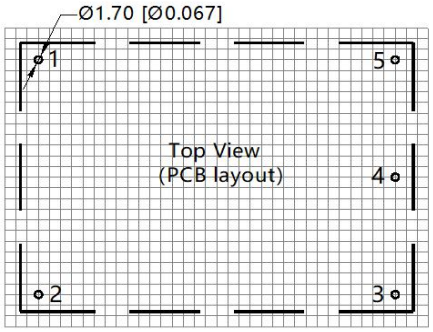


Note: Grid 2.54*2.54mm

| Pin | Mark |
|---|---|
| 1 | -Vin |
| 2 | +Vin |
| 3 | NC |
| 4 | -Vo |
| 5 | +Vo |

Note:
Unit: mm[inch]
Pin diameter tolerances: ±0.10[±0.004]
General tolerances: ±0.50[±0.020]


MORNSUN Guangzhou Science & Technology Co., Ltd. reserves the copyright and right of final interpretation

## A5 Chassis Package Dimensions

THIRD ANGLE PROJECTION

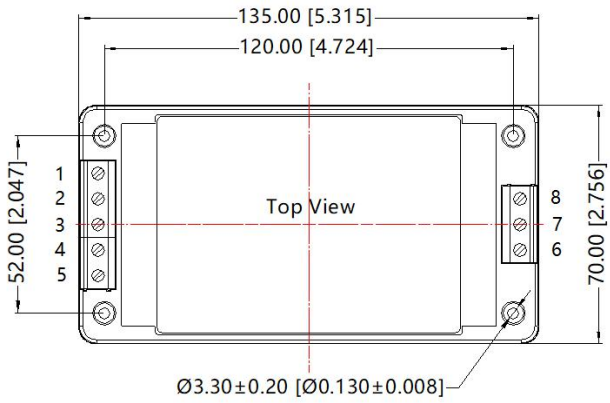


| Pin | Mark |
|---|---|
| 1 | -Vin |
| 2 | NC |
| 3 | NC |
| 4 | NC |
| 5 | +Vin |
| 6 | NC |
| 7 | -Vo |
| 8 | +Vo |

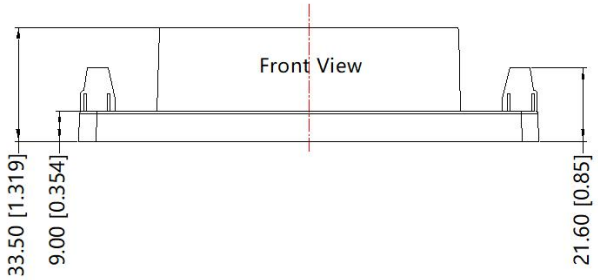


Note:
Unit: mm[inch]
Wire range: 24~12 AWG
Tightening torque: Max 0.4 N·m
General tolerances: ±1.00[±0.040]

## A6 DIN-Rail Package Dimensions

THIRD ANGLE PROJECTION

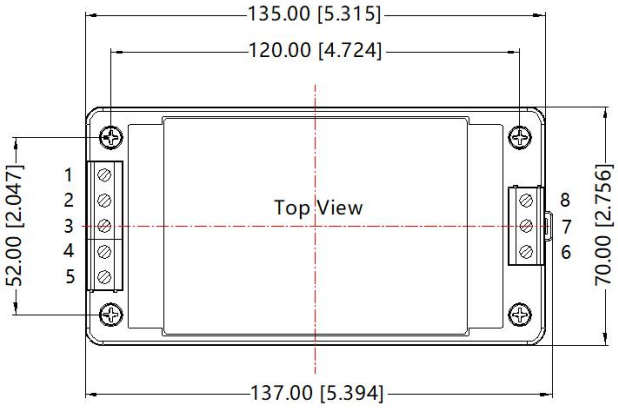


| Pin | Mark |
|---|---|
| 1 | -Vin |
| 2 | NC |
| 3 | NC |
| 4 | NC |
| 5 | +Vin |
| 6 | NC |
| 7 | -Vo |
| 8 | +Vo |

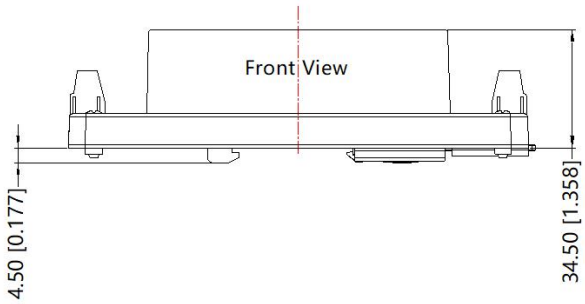


Note:
Unit: mm[inch]
Mounting rail: TS35, rail needs to connect safety ground
Wire range: 24~12 AWG
Tightening torque: Max 0.4 N·m
General tolerances: ±1.00[±0.040]


MORNSUN Guangzhou Science & Technology Co., Ltd. reserves the copyright and right of final interpretation

⚠WARNING:
1. CAUTION: "To reduce the risk of fire, connect only to a circuit provided with 4 amperes maximum branch-circuit over-current protection in accordance with the National Electrical Code, ANSI/NFPA70."
2. WARNING: REPLACE ONLY WITH THE SAME RATINGS AND TYPE OF FUSE.
3. DANGER — HIGH VOLTAGE.

AVERTISSEMENT:
1. Avertissement: Pour réduire le risque d'incendie, veuillez connecter uniquement à des circuits de dérivation avec protection contre les surintensités conformes au code électrique national ANSI/ NFPA 70.
2. AVERTISSEMENT : N'UTILISER QUE DES FUSIBLES DE MÊMECALIBRE ET DE MÊME TYPE QUE LE FUSIBLE DORIGINE.
3. DANGER ： HAUTE TENSION.

Note:
1. For additional information on Product Packaging please refer to www.mornsun-power.com. Packaging bag number: 58220021 (Horizontal package), 58220031 (A5/A6 package);
2. Unless otherwise specified, A5/A6 products performance are consistent with Horizontal package products;
3. Unless otherwise specified, parameters in this datasheet were measured under the conditions of Ta=25℃, humidity<75% with nominal input voltage and rated output load;
4. All index testing methods in this datasheet are based on our company corporate standards;
5. The above are the performance indicators of the product models listed in this datasheet. Some indicators of non-standard models will exceed the above requirements. For details, please contact our technical staff;
6. We can provide product customization service;
7. Products are related to laws and regulations: see "Features" and "EMC";
8. Our products shall be classified according to ISO14001 and related environmental laws and regulations, and shall be handled by qualified units;
9. If the final product application is connected to a photovoltaic array, the array needs to be grounded and the voltage between the positive and negative poles of the product shall not be greater than 1200VDC.

Mornsun Guangzhou Science & Technology Co., Ltd.
Address: No. 5, Kehui St. 1, Kehui Development Center, Science Ave., Guangzhou Science City, Huangpu District, Guangzhou, P. R. China
Tel: 86-20-38601850 Fax: 86-20-38601272 E-mail: info@mornsun.cn www.mornsun-power.com


MORNSUN Guangzhou Science & Technology Co., Ltd. reserves the copyright and right of final interpretation